Since 1949
Acme Sanitary Ware Co. Ltd.
1/F, Acme Building, 22-28 Nanking Street, Kowloon, Hong Kong
Tel: 2388 7171 Fax: 2710 8012
Email: acme@acmesanitary.com.hk
Website: www.acmesanitary.com.hk

DELABIE

PROJECT		REF		REV	ITEM CODE	
		DATE			PAGE	

SANITARY WARE SPECIFICATION SHEET

Item Descriptions	Delabie (France) "TEMPOMATIC 4" Deck-mounted chrome plated electronic basin tap in 6V DC supply ; nominated flow rate **0.9 L/min** in WELS **Grade 1**; Registration No. TN 21-0090
Model	440006
Material/ Finish	Brass/ Chrome Plated
Manufacturer	Delabie (France)
Source	Acme Sanitary Ware Co. Ltd
	Mr. Eric Wong/ Mr. Don Yuen
Contact Tel/Fax	(852) 2388-7171 / (852) 2710-8012
E-mail	acme@acmesanitary.com.hk
Website	www.acmesanitary.com.hk

Illustration/ Drawing

TEMPOMATIC 4 electronic tap Ref. 440006

Deck-mounted electronic basin tap:
Battery-operated with integrated 123 6V Lithium batteries.
Reduced-stagnation solenoid valve and electronic unit integrated into the body of the tap.
Flow rate pre-set at 3 lpm at 3 bar, can be adjusted from 1.4 - 6 lpm.
Scale-resistant flow straightener.
Duty flush (~60 seconds every 24 hours after last use).
Active, infrared presence detection, sensor at the end of the spout optimises detection.
Chrome-plated metal body.
Cap fixed in place by 2 concealed screws.
PEX flexible with stopcock F3/8" and filter.
Fixing reinforced by two stainless steel rods.
Anti-blocking security.
Suitable for people with reduced mobility.

Supply	6V batteries
Connector	F3/8"
Technology	Electronic
Drop height	75mm
Spout length	110mm
Flow rate	3 lpm
Certificates	ACS

ADVANTAGES

- Total hygiene: no manual contact
- 90% water savings
- Batteries integrated into the body of the tap
- Anti-bacterial proliferation duty flush

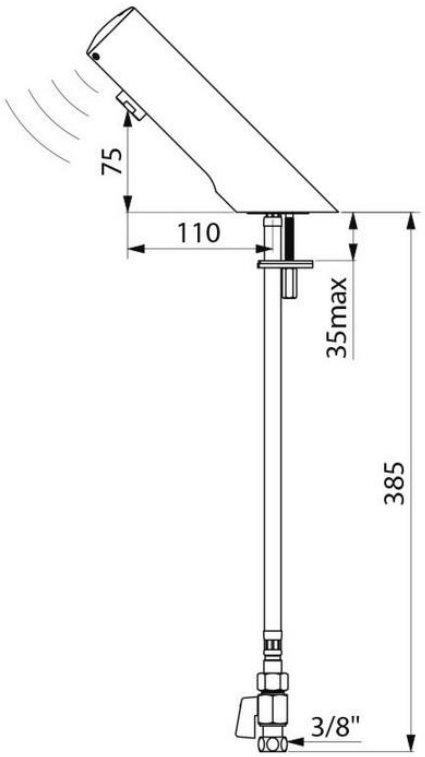

Note:

** All information of the above is for the reference only. No prior notice is made if any changes.*

註冊號碼 (Registration No.) : TN 21-0090

自願參與用水效益標籤計劃 - 水龍頭
Voluntary Water Efficiency Labelling Scheme - Water Taps

Certificate of Registration 註冊證書

ACME SANITARY WARE CO., LTD. 2388 7171

茲證明
This is to certify that

將下列水龍頭在本計劃內註冊：
has registered the following water tap under this scheme :

牌 子 / Brand	:	Delabie
型 號 / Model	:	44000X
種 類 / Type	:	Non-mixing
原產地 / Country or Region Origin	:	France

X – denotes the power source

在用水效益標籤上展示的標誌 *Symbolic Presentation on the Water Efficiency Label*	:	💧	滴水點 *Water droplet(s)*
用水效益級別 *Water Efficiency Grade*	:	1	with additional merit*
耗水量 *Water Consumption*	:	0.9	公升/分鐘 *litres/minute*

*with additional merit of "Automatic closing mechanism"

簽發日期 : 9 September 2021
Date of Issue :

水務署
Water Supplies Department

張業駒

水務署署長(張業駒代行)
for Director of Water Supplies

水務署
Water Supplies Department

...dquarters
香港...打道七號入境事務大樓 48 樓
...on Tower, 7 Gloucester Road, Wan Chai, Hong Kong

ACME SANITARY WARE CO., LTD. 2388 7171

本署檔號 Our ref. ...D 3321/2021 T/J(675/2021)
來函檔號 Your ref. :

電話 Tel. :
傳真 Fax. : 2824 0578

13 July 2021

Approval of "DELABIE" Sensor Tap
(General Acceptance No. C20210746)

Your letter ref. 44000X dated 29 April 2021 and subsequent submission received by this department on 16 June 2021 refer.

Having considered the test report ref. J26262 issued on 21 April 2021 by Nutek Systems (HK) Ltd., this Authority accepts that the fitting described below complies with, and its use when correctly installed does not contravene, the Waterworks Ordinance and Regulations.

Name of Manufacturer:	Delabie SCS
Country of Origin:	France
Brand:	Delabie
Details of Fitting:	3/8" Deck mounted sensor tap
Model:	44000X (where "X" denotes the power source)
Body Markings:	DELABIE
Expiry Date:	7 April 2026

10 years+ 關心頭等會 caringorganisation

This Authority hereby permits the use of the above fitting in fresh water plumbing systems subject to full adherence to Waterworks installation requirements. In particular, you are required to draw your customers' attention to the following requirement-

"A stop cock or gate valve must be installed at the upstream of the fitting for manual isolation of water supply." AND

"The main voltage operated sensor valve should comply with the electricity safety regulation for applications in bathroom, toilet etc."

A condition of this acceptance is that the fitting to be installed shall be replicas of the sample as certified by the testing agent mentioned above and without modifications. This acceptance may be withdrawn at any time if the standard of the fitting installed fail to meet that of the approved sample or if the fitting is found to be unsuitable for use in fresh water plumbing systems.

This acceptance is only applicable to the main body of the fitting, unless otherwise specified.

For the use of the fitting in any project, the General Acceptance Number of this letter must be quoted as a means of identification of acceptance of the fitting by this Authority.

Should you have any enquiries, please contact our Engineer Mr. Terry KUNG at tel. no. 3583 4086.

Yours faithfully,

(Roger WONG)
for Director of Water Supplies

Encl.

c.c. WSD 3321/1/82] - without catalogue
ME/MC] - with soft copy only